RIC25-400-R/DC24V

4 pole | 25 A | 5.4 kW

Main circuit

Available contact materials	AgNi
Rated voltage	400 V AC
Rated current AC-1	25 A
Recommended minimum contact load	50 mA, 17 V
Inrush current	60 A, 100 ms / 280 A, 300 µs
Rated load AC-1	5.4 kW
Rated load AC-3	1.3 kW
Rated load DC-1	see fig. 2
Mechanical endurance (cycles)	≥ 10 000 000
Electrical endurance at rated load AC-1 (cycles)	≥ 200 000
Electrical endurance at rated load AC-3 (cycles)	≥ 500 000
Electrical endurance at rated load DC-1 (cycles)	≥ 100 000
Electrical endurance at rated load DC-5 (cycles)	≥ 100 000
Switching frequency at rated load AC-1 (cycles / h)	≤ 600
Switching frequency at rated load AC-3 (cycles / h)	≤ 600
Switching frequency at rated load DC-1 (cycles / h)	≤ 300
Switching frequency at rated load DC-3 (cycles / h)	≤ 300
Switching frequency at rated load DC-5 (cycles / h)	≤ 300

Control circuit

Nominal voltage	see table product references
Operating voltage range	0.70 ... 1.25 U_N
Pick-up voltage	≤ 0.70 U_N
Release voltage	≥ 0.1 U_N
Pick-up time	15 ... 45 ms
Release time	20 ... 70 ms
Power consumption DC	4.6 W

Insulation

Rated insulation voltage	440 V
Rated impulse withstand voltage open contact	4 kV / 1 min
Pollution degree	3
Overvoltage category	III
Clearance of open contact	3.6 mm

Wiring

Contact type control / main circuit	Screw connection, M3 / M3.5
Conductor cross section control / main circuit	2.5 mm^2 / 6 mm^2
Stripping Length control / main circuit	7 mm / 9 mm
Nominal screw torque control / main circuit	0.6 Nm / 1.2 Nm
Screwdrive control / main circuit	PZ1 / PZ1
Max. wire count control / main circuit	1
Dual sleeve control / main circuit	1

Housing and environmental conditions

Storage temperature (no ice)	-40 ... 80 °C
Operation temperature	-40 ... 70 °C
Relative huminity, no condensation	95 %
Ingress Protection	IP20
Weight	250 g
Housing material	PA 6
Operation Altitude	Max. 2 000 m
Mounting	DIN rail
Dimensions	see fig. 3
Mounting position	see installation instructions

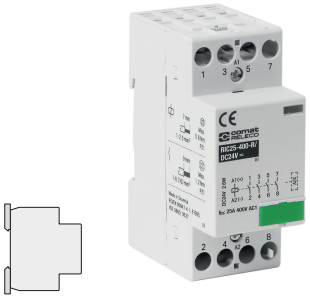

fig. 1. Wiring diagram

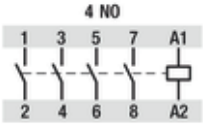

fig. 2. DC load limit curve

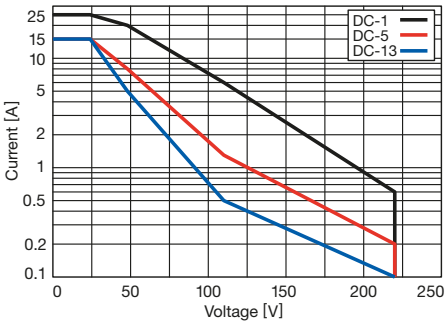

fig. 3. Dimensions (mm)

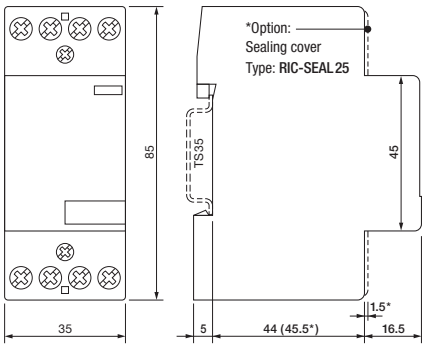

Technical approvals, conformities

Standards	IEC/EN 60947
Railway	EN 50155; EN 45545-2
Approvals	

RIC25-400-R/DC24V

4 pole | 25 A | 5.4 kW

Safety

MTTF - Mean time to failure, AC-1 (h)	5,000
MTTF = $1/\lambda$ = B10/(0.1 n_{op}), AC-3 (h)	7,500
$MTTF_d$ - Mean time to failure dangerous, AC-1 (h)	6,666
$MTTF_d = 1/\lambda = B10_d$ /(0.1 n_{op})	10,000
B10 - Number of operating cycles until 10 % of devices fail, AC-1	150,000
B10 - Number of operating cycles until 10 % of devices fail, AC-3	225,000
$B10_d$ - Number of operating cycles until 10 % of device dangerous, AC-1	200,000
$B10_d$ = B10/ratio of dangerous failures, AC-3	300,000
λ - Failure rate, AC-1 (1/h)	0.0002
λ = (0.1 n_{op})/B10, AC-3 (1/h)	0.000133
λ_d - Failure rate dangerous, AC-1 (1/h)	0.00015
$\lambda_d = (0.1n_d)/B10_{op}$, AC-3 (1/h)	0.0001
Ratio of dangerous failures (%)	75
n_{op} - Operating cycles (operating cycles/h)	300

Product references

Description	Type	24
4 NO	RIC25-400-R/DC...V	✓

Other voltages on request. Please contact support@comatreleco.com.
«…» List control circuit voltage to complete product references

Accessories

Busbar	RIC-NS-2-1, RIC-PS-2-3, RIC-PS-2-4
End covers	RIC-EK-23 (BAG 10 PCS), RIC-EK-40 (BAG 10 PCS)
Auxiliary contact	RIC-AUX02, RIC-AUX11, RIC-AUX20
Sealing cover	RIC-SEAL25 (BAG 10 PCS)

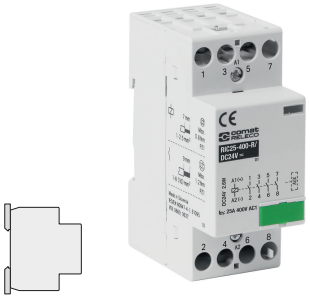

fig. 1. Wiring diagram

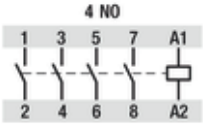

fig. 2. DC load limit curve

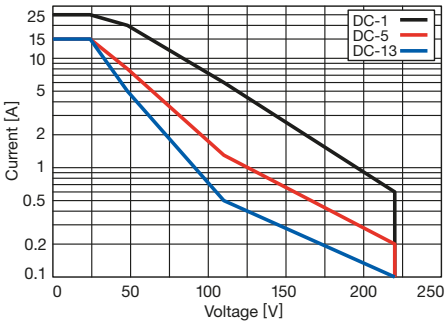

fig. 3. Dimensions (mm)

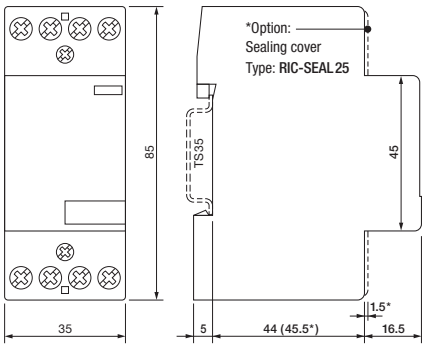

Technical approvals, conformities

Standards	IEC/EN 60947
Railway	EN 50155; EN 45545-2
Approvals	